REV.	DESCRIPTION	DATE	APPROVED
A	MATERIAL WAS 14 GA SS, NO FINISH. UPDATED PRINT FORMAT.	5/28/13	DMM

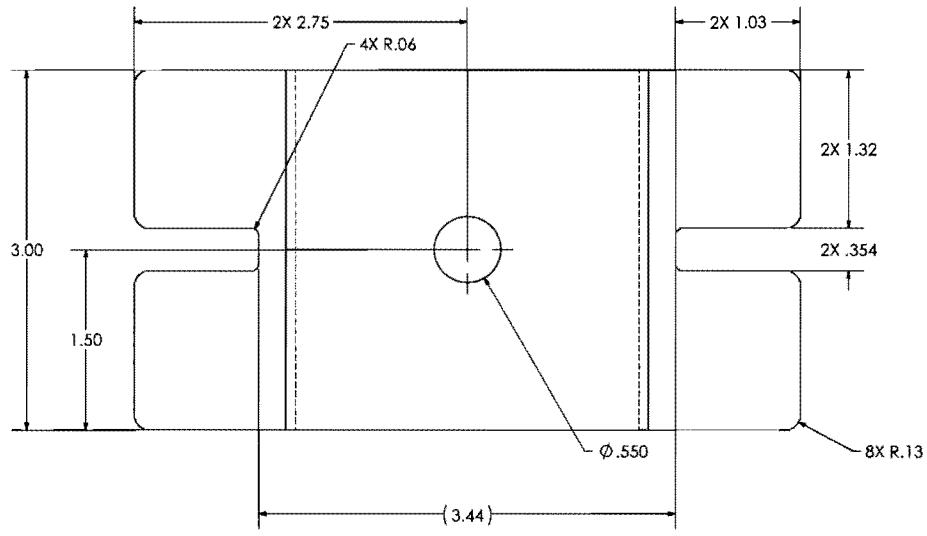

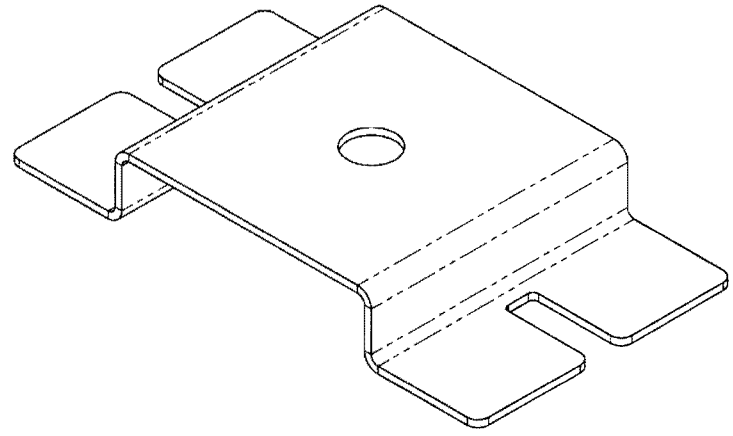

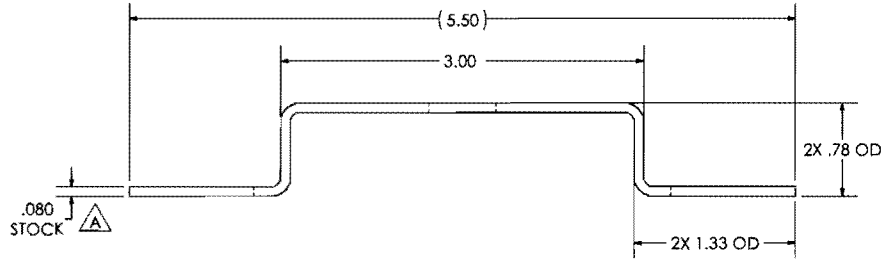

13163801

NOTES:

1. SHIP CLEAN AND BURR FREE.
2. FLAT LAYOUT FOR PRESS BRAKE K FACTOR = .445

PROPRIETARY AND CONFIDENTIAL
THE INFORMATION CONTAINED IN THIS DRAWING IS THE SOLE PROPERTY OF GENMET.
ANY REPRODUCTION IN PART OR AS A WHOLE WITHOUT THE WRITTEN PERMISSION OF GENMET IS PROHIBITED.

UNLESS OTHERWISE SPECIFIED:
DIMENSIONS ARE IN INCHES
TOLERANCES ARE NOT ACCUMULATIVE
ANGULAR: MACH ± .5° BEND ± 1°
TWO PLACE DECIMAL ±.06
THREE PLACE DECIMAL ±.020
HOLE SIZES +.010 / -.005
PEM HOLES +.003 / -.000

	NAME	DATE
DRAWN	DMM	8/3/12

COMMENTS:

A MATERIAL: 0.080 5052 ALUM

FINISH: NONE

DO NOT SCALE DRAWING | BEND RELIEF MAY VARY FROM SHOWN

GENMET CORP
10245 NORTH ENTERPRISE DRIVE
MEQUON, WI 53092
PH 262-238-7000
ENGINEERING@GENMET.COM

ADAPTER PLATE

SIZE	DWG. NO.	REV
B	12216300	A

SCALE: 1:1 | SHEET 1 OF 2